Experiment–2: Measurement Techniques for Electronic Circuits

Group no: - 14	Date of Experiment: - 03/08/2023
Roll no: - 22CS02002 20CS02012	Name: - Soham Chakraborty Kasthuri Hrushikesh

Part-1: Familiarization with Function Generator and CRO/DSO

Aim of the Experiment: - Familiarize ourselves with the working of function generator and DSO.

Function Generator:- A function generator is a piece of electronic test instrument used to generate and deliver standard waveforms, typically sine and square waves, to a device under test. It can be used to test a design or confirm that a piece of electronic equipment is working as intended.

It can generate Sine wave, pulse triangular square and other waves.

It has 2 channels for output, it can produce both AC and DC voltage. AC voltage frequency can range from 200Hz to 1MHz. It has 2 channels for output from which it was generate an output waveform

DSO:- DSO stands for Digital Storage oscilloscope. Digital storage oscilloscopes (DSOs) are electronic instruments that convert the analogue signal into a digital format and store it in memory, allowing for easy recall and analysis. Similar to function generator the DSO also has 2 channels for the I/O of signal receiving.

One of them is used for taking the reference point/voltage between the input and ground. And the other is used to take data on the required output Voltage/Current of the system.

DSO has 3 modes- the Normal mode, X-Y mode and roll mode.

The normal mode is used to show the general cartesian figures of the waveforms.

X-Y modes show the Lissajous figures and can be used to find out the Phase difference between the input and output waveforms.

Roll mode just shows a continuous moving waveform w.r.t time

Part-2: Low-Pass RC Circuit

Aim of the Experiment: - Set up a circuit to measure the behaviour of a low-pass RC circuit.

Equipments required: -

- Required resistor values–1 kΩ (×1)
- Required Capacitor values – 0.1uF (×1)
- Breadboard (×1)
- Function generator
- Digital Storage Oscilloscope (DSO)
- Probes (×3) – 1 for function generator, 2 for DSO
- Connecting wires

Circuit Diagram: -

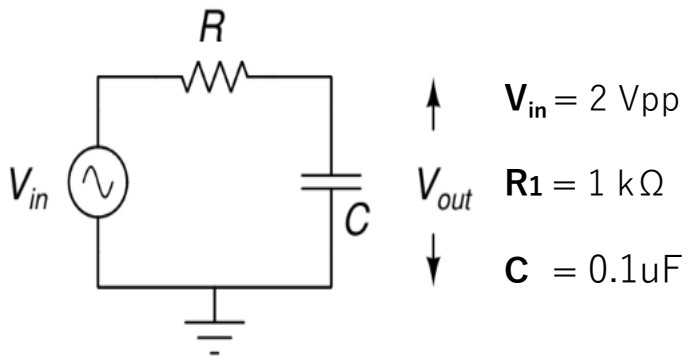

Observation Table: -

Frequency (In kHz)	Voltage Out (In Vpp)
0	2
0.2	1.99
0.4	1.97
0.6	1.92
0.8	1.88
1	1.79
1.2	1.7
1.4	1.6
1.6	1.53
1.8	1.45
2	1.38
2.5	1.18
3	1.05
3.5	0.92
4	0.83
4.5	0.75
5	0.7
5.5	0.62
6	0.57
7	0.49
8	0.44
9	0.4
10	0.35
11	0.31
12	0.27
13	0.25
14	0.24
15	0.23

Theoretically calculated vs observed graph values:-

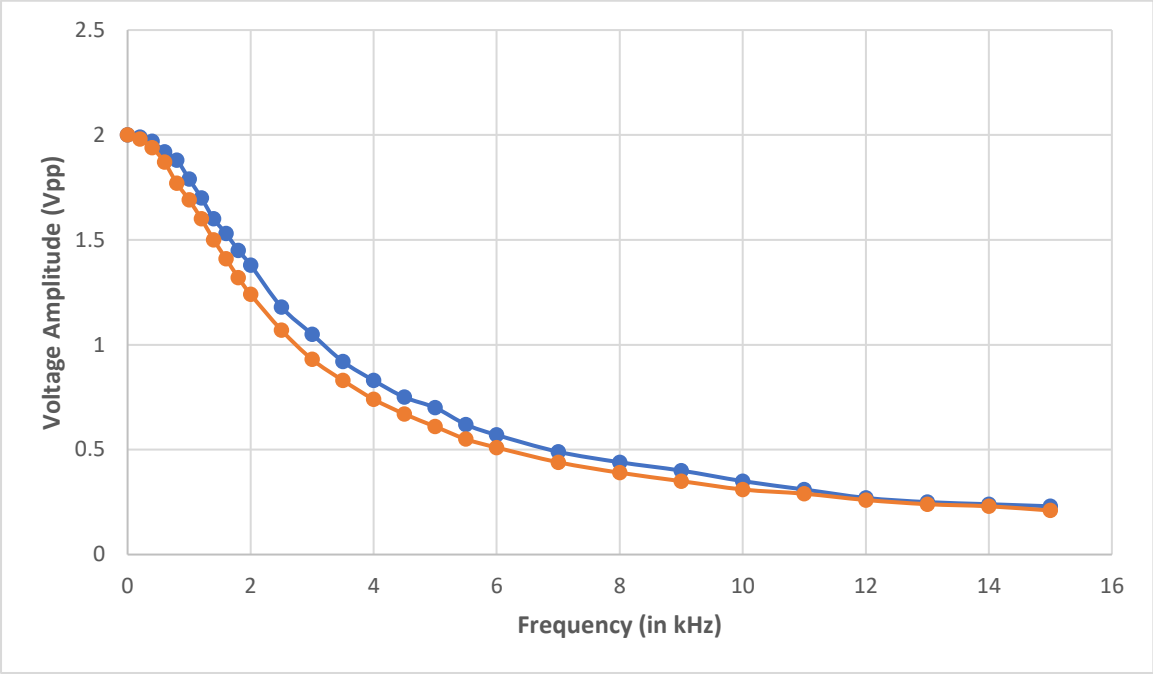

Theoretical Values

Observed Values

Graph Using LTspice Simulation:-

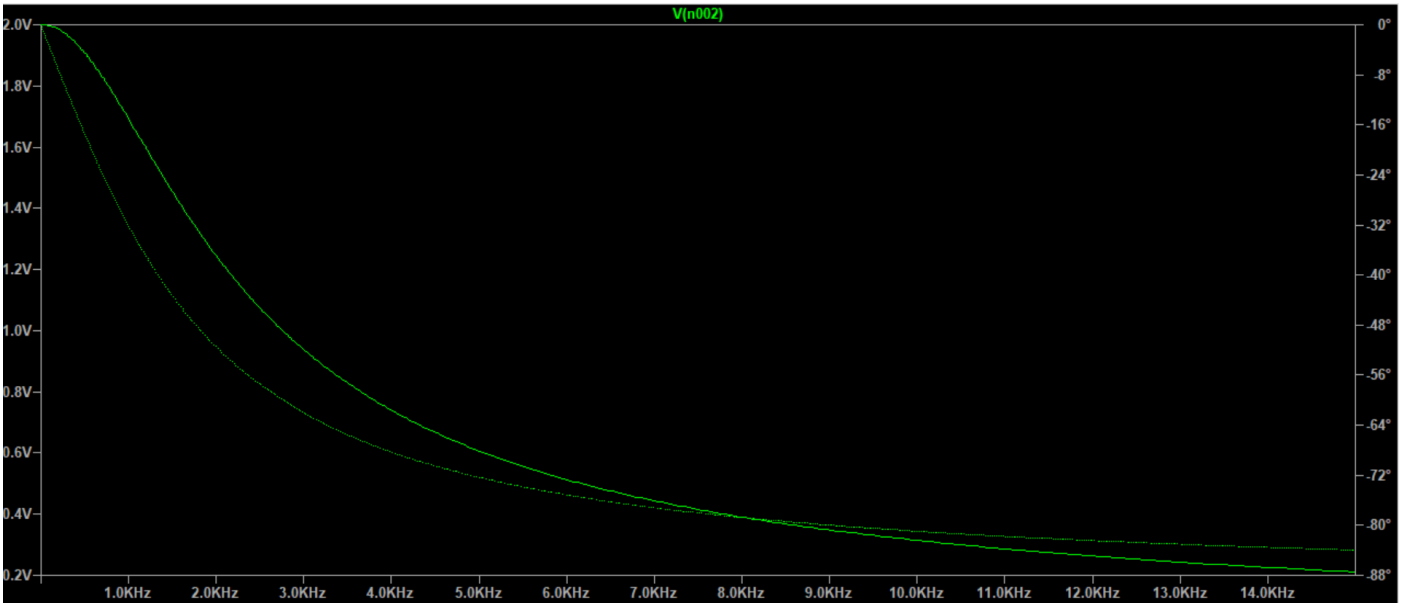

Calculation: -

Frequency (in kHz)	**V_{in}** (In Vpp)	**V_{out}** (in Vpp)	**Gain** (V_{out}/V_{in})	**Gain** (In dB)
0	2	2	1	0
0.2	2	1.99	0.995	-0.04354
0.4	2	1.97	0.985	-0.13128
0.6	2	1.92	0.96	-0.35458
0.8	2	1.88	0.94	-0.53744
1	2	1.79	0.895	-0.96354
1.2	2	1.7	0.85	-1.41162
1.4	2	1.6	0.8	-1.9382
1.6	2	1.53	0.765	-2.32677
1.8	2	1.45	0.725	-2.79324
2	2	1.38	0.69	-3.22302
2.5	2	1.18	0.59	-4.58296
3	2	1.05	0.525	-5.59681
3.5	2	0.92	0.46	-6.74484
4	2	0.83	0.415	-7.63904
4.5	2	0.75	0.375	-8.51937
5	2	0.7	0.35	-9.11864
5.5	2	0.62	0.31	-10.1728
6	2	0.57	0.285	-10.9031
7	2	0.49	0.245	-12.2167
8	2	0.44	0.22	-13.1515
9	2	0.4	0.2	-13.9794
10	2	0.35	0.175	-15.1392
11	2	0.31	0.155	-16.1934
12	2	0.27	0.135	-17.3933
13	2	0.25	0.125	-18.0618
14	2	0.24	0.12	-18.4164
15	2	0.23	0.115	-18.786

Gain is calculated using the Formula

$$\boxed{\textbf{Gain} = \frac{Vout}{Vin}}$$

Gain in decibels is calculated using formula:

$$\boxed{\textbf{Gain (}\text{in dB}\textbf{)} = 20 \times log(\frac{Vout}{Vin})}$$

Gain(dB) vs Frequency (kHz) graph:

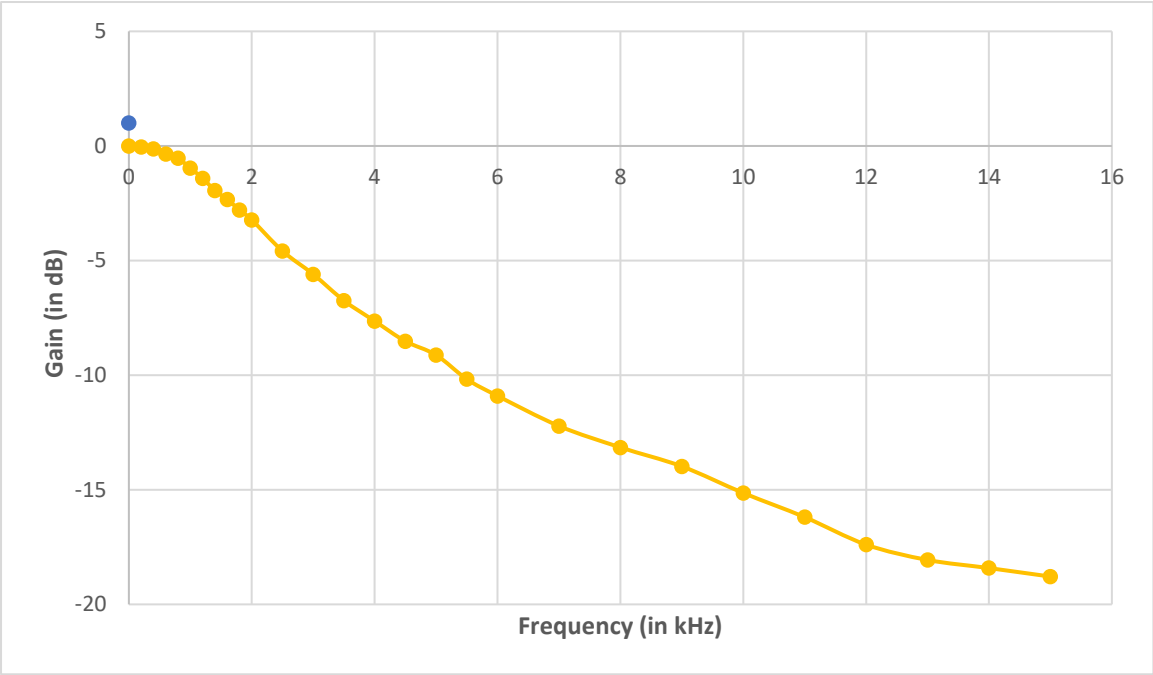

From the graph it is observed that the 3dB cutoff frequency is between **1.6kHz to 8kHz.**

Roll-off Rate: The roll-off rate is a crucial characteristic of a low pass filter, indicating how rapidly the gain decreases beyond the cutoff frequency

Phase difference using Time Base method:-

Observed time base settings:

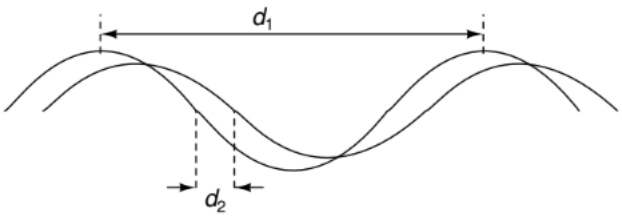

d1 × time base knob setting (TB) ⇒ 360◦ phase

d2 × time base knob setting (TB) ⇒ gives the desired phase angle.

Here, observed $\mathbf{d_1}$ = 1ms, $\mathbf{d_2}$ = 0.09ms.

Thus, $$\mathbf{TB} = \frac{360}{d1}$$

Hence, phase difference

$$\boxed{\Phi = \mathbf{TB} \times \mathbf{d_2} = \frac{360}{d1} \times \mathbf{d_2}}$$

From this, we get

Φ = 32.4º

Using Lissajous Technique to calculate phase:

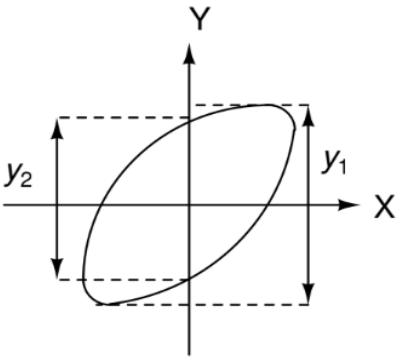

$\mathbf{y_1}$ = 1.681

$\mathbf{y_2}$ = 0.832

From the values of $\mathbf{y_1}$ and $\mathbf{y_2}$ we can calculate the phase difference as follows using the formula:

$$\boxed{\Phi = \sin^{-1}\frac{y2}{y1}}$$

Φ turns out to be equal to **29.67º**.

Part-3: High-Pass RC Circuit

Aim of the Experiment: - Set up a circuit to measure the behaviour of a high-pass RC circuit.

Equipments required: -

- Required resistor values–1 kΩ (×1)
- Required Capacitor values – 0.1uF (×1)
- Breadboard (×1)
- Function generator
- Digital Storage Oscilloscope (DSO)
- Probes (×3) – 1 for function generator, 2 for DSO
- Connecting wires

Circuit Diagram: -

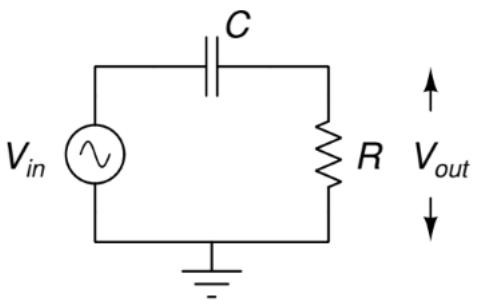

$\mathbf{V_{in}} = 2$ Vpp

$\mathbf{R_1} = 1$ kΩ

$\mathbf{C} = 0.1$uF

Observation Table: -

Frequency (In kHz)	Voltage Out (In Vpp)
0	0
0.2	0.27
0.4	0.51
0.6	0.74
0.8	0.95
1	1.12
1.2	1.27
1.4	1.38
1.6	1.5
1.8	1.57
2	1.62
2.5	1.75
3	1.82
3.5	1.85
4	1.89
4.5	1.92
5	1.96
5.5	1.95
6	1.98
7	1.98
8	1.97
9	1.98
10	1.98
11	1.986
12	1.988
13	1.991
14	1.993
15	1.996

Theoretically calculated vs observed graph values:-

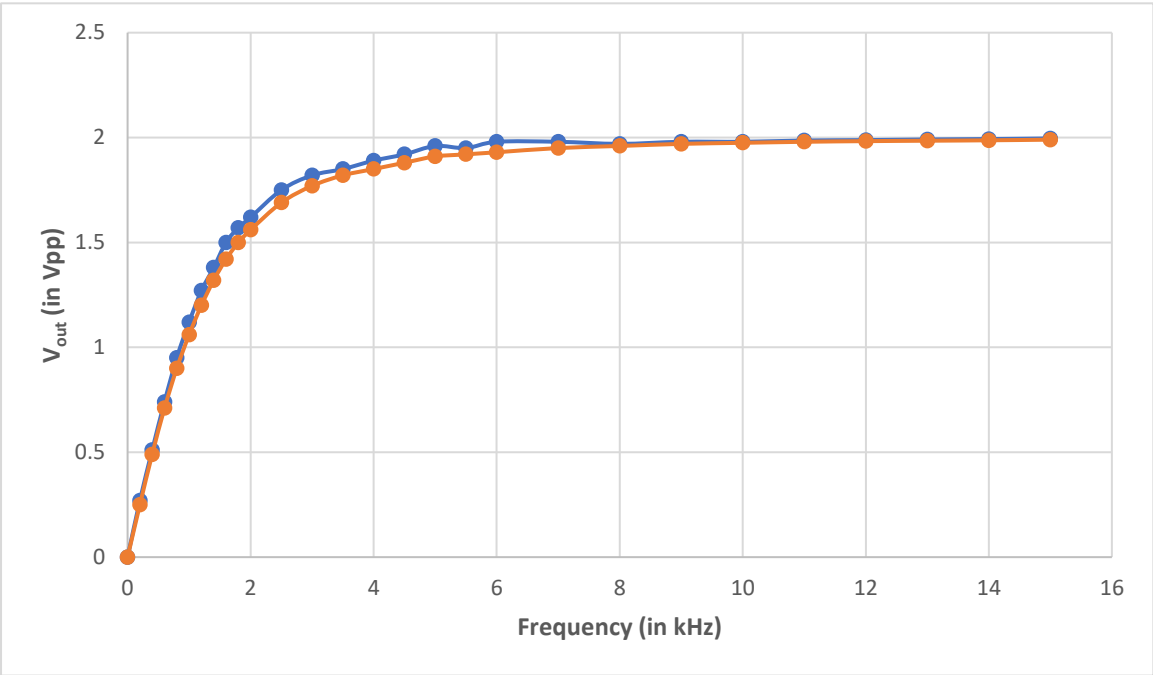

Theoretical Values

Observed Values

Graph Using LTspice Simulation:-

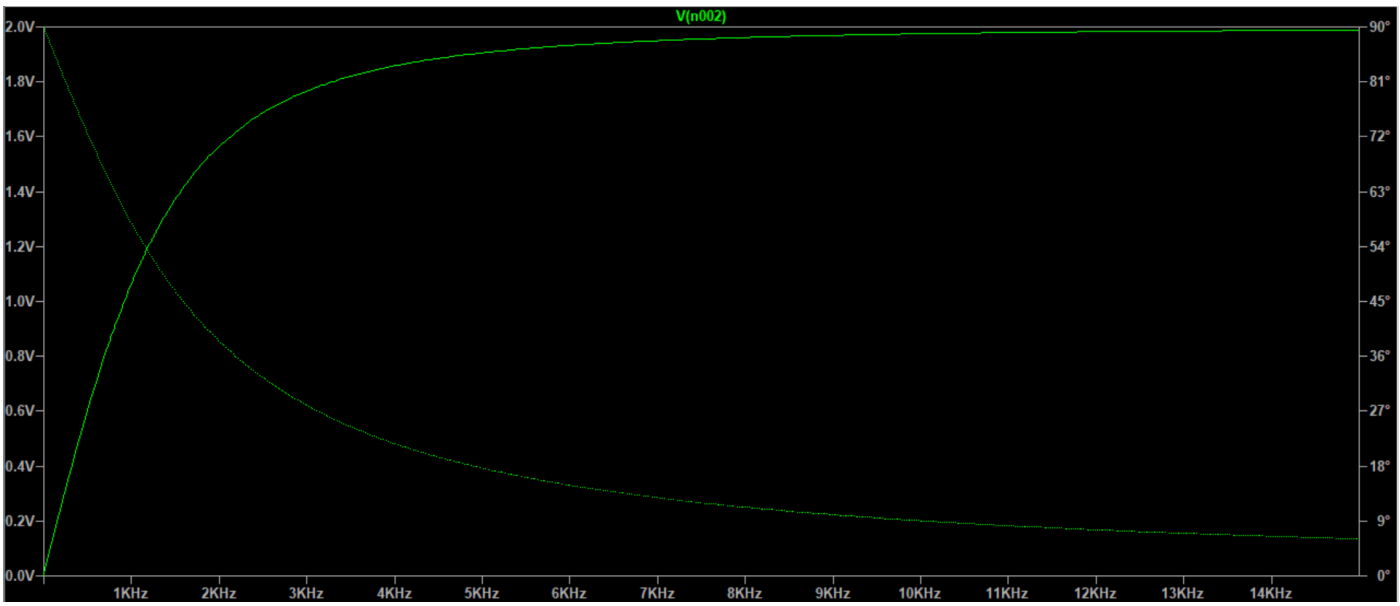

Calculation: -

Frequency (in kHz)	**V_{in}** (In Vpp)	**V_{out}** (in Vpp)	**Gain** (V_{out}/V_{in})	**Gain** (In dB)
0	2	0	0	-Infinity
0.2	2	0.27	0.135	-17.3933
0.4	2	0.51	0.255	-11.8692
0.6	2	0.74	0.37	-8.63597
0.8	2	0.95	0.475	-6.46613
1	2	1.12	0.56	-5.03624
1.2	2	1.27	0.635	-3.94453
1.4	2	1.38	0.69	-3.22302
1.6	2	1.5	0.75	-2.49877
1.8	2	1.57	0.785	-2.10261
2	2	1.62	0.81	-1.8303
2.5	2	1.75	0.875	-1.15984
3	2	1.82	0.91	-0.81917
3.5	2	1.85	0.925	-0.67717
4	2	1.89	0.945	-0.49136
4.5	2	1.92	0.96	-0.35458
5	2	1.96	0.98	-0.17548
5.5	2	1.95	0.975	-0.21991
6	2	1.98	0.99	-0.0873
7	2	1.98	0.99	-0.0873
8	2	1.97	0.985	-0.13128
9	2	1.98	0.99	-0.0873
10	2	1.98	0.99	-0.0873
11	2	1.986	0.993	-0.06102
12	2	1.988	0.994	-0.05227
13	2	1.991	0.9955	-0.03917
14	2	1.993	0.9965	-0.03045
15	2	1.996	0.998	-0.01739

Gain is calculated using the Formula

$$\boxed{\textbf{Gain} = \frac{Vout}{Vin}}$$

Gain in decibels is calculated using formula:

$$\boxed{\textbf{Gain (}\text{in dB}\textbf{) = 20} \times \boldsymbol{log}\left(\frac{Vout}{Vin}\right)}$$

Gain(dB) vs Frequency (kHz) graph:

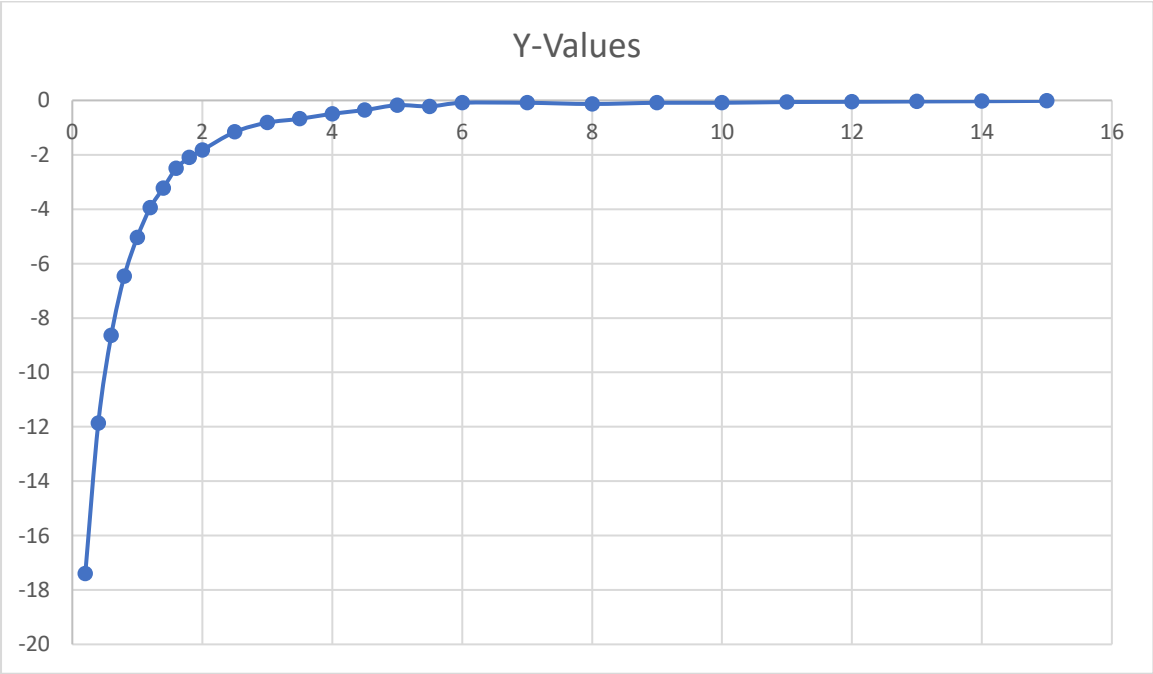

From the graph it is observed that the 3dB cutoff frequency is nearly **1.6kHz.**

Phase difference using Time Base method:-

Observed time base settings:

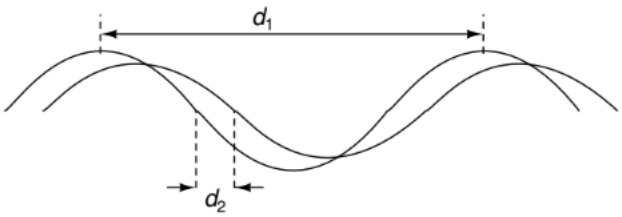

d1 × time base knob setting (TB) ⇒ 360◦ phase

d2 × time base knob setting (TB) ⇒ gives the desired phase angle.

Here, observed $\mathbf{d_1}$ = 1ms**,** $\mathbf{d_2}$ = 0.15ms.

Thus, $$\mathbf{TB} = \frac{360}{d1}$$

Hence, phase difference

$$\boxed{\Phi = \mathbf{TB} \times \mathbf{d_2} = \frac{360}{d1} \times \mathbf{d_2}}$$

From this, we get

Φ = 54º

Using Lissajous technique to calculate phase:

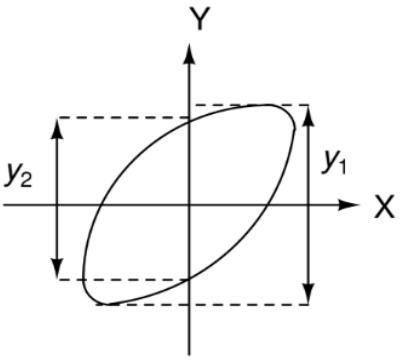

$\mathbf{y_1} =$ 2.15

$\mathbf{y_2} =$ 1.74

From the values of $\mathbf{y_1}$ and $\mathbf{y_2}$ we can calculate the phase difference as follows using the formula:

$$\boxed{\Phi = \sin^{-1}\frac{y2}{y1}}$$

Φ turns out to be equal to **54.03º.**

Conclusion: -

- In this experiment we have got a basic idea on how to use the function generator and the DSO and also got acquainted to some of their functionalities.
- It is observed that the observed data plotted in the graph of $Voltage_{out}$ vs frequency the observed values are slightly above the theoretical values. This is due to the inaccuracies while producing output from the function generator which sometimes happen to be around 2.1Vpp rather than 2Vpp. This increased initial voltage results in slight shifting of graph in +ve y-direction.
- The theoretical values matched closely with that of the observed/calculated values. Differences were observed due to low resolution while calculating the d_1 and d_2 in TB settings and also while calculating y_1 and y_2 in the Lissajous diagrams. The differences in these values further added up in the calculations of phase difference. As a result the phase difference tends to deviate approximately around 2-3° from the theoretical value.
- In addition to these errors the tolerances of resistor and the capacitor also account for some of the errors.
- The experimental results confirmed the behaviour of the RC low pass filter in attenuating high-frequency signals. The measured cutoff frequency closely matched the calculated value, indicating the accuracy of the experiment. The small deviations observed might be attributed to component tolerances and parasitic effects.

Discussion:-

- **How are notations on a Capacitor done?**

  Notations denoting capacitance of a capacitor are generally a 3 digit number, the first 2 digits are the base value which is multiplied by 10 to the power the 3rd number with the unit being in pF.

  For e.g: if a capacitor is rated 684 it indicated it's capacitance is 68*10^4pF

  Hence, it is 680nF or 0.68uF.

- **What are Lissajous figures?**

  Lissajous figure, also called Bowditch Curve, looped curves produced by the intersection of two sinusoidal curves the axes of which are at right angles to each other. They are usually used to define the resultant motion of two simple harmonic motions which are at right angles to each other.
  The curve traced out by these figures tend to be more like an elliptical shape.
  In the experiment the Lissajous curve was elliptical consisting only of a single simple closed loop.

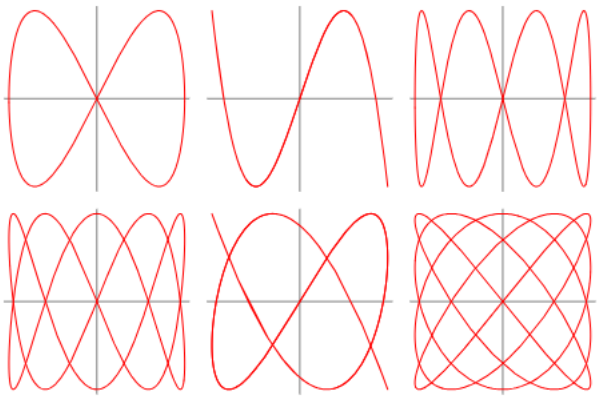

  Lissajous figures can be used to calculate the phase difference between the two parent waves using the process as the described in the experiment. Along with this they can also be used to analyse the amount of maximum energy transfer occurring between the two waves.

- **What is 3dB cutoff frequency?**

  3 dB cut-off frequency means the frequency at which the gain of the system is reduced by a factor of $1/\sqrt{2}$ times.

  If gain at $\omega = 0$ is "A" then the frequency at which the Gain is reduced to $A/\sqrt{2}$ is termed as the cut-off frequency and is denoted by ω_c.

  The reason for 3dB is derived as follows:

  Gain = $1/\sqrt{2}$ means

  Using relation between (dB) and Gain describe above we have

  $dB=20*\log(1/\sqrt{2})$

  Equating this we get dB= -3.01 dB which is nearly equal to 3dB.

- **Before using the function generator, ensure its output load option is set to 'High Z' i.e. high impedance. Why is this necessary?**

  Setting the function generator to High Z mode or a specific load impedance, is called impedance matching, and is a critical feature in electrical design.

  The purpose of setting the function generator to high impedance (also known as "high Z") is to minimize the load on the circuit being tested. In high impedance mode, the function generator presents a very high resistance to the circuit, which reduces the amount of current that flows through the circuit. This can be useful in situations where a circuit is sensitive to current flow, or where the circuit is being used to measure voltage rather than current. Additionally, high impedance mode can also help to reduce noise and interference in a circuit, as it limits the amount of current that can flow through the circuit.

- **What difference in phase do you see between the two techniques and why?**

  The difference in phase difference between the two techniques namely high-pass and low-pass are complimentary to each other.
  When w=0 For low pass filter the phase difference is equal to 0° while for the high-pass phase difference is +90°.
  At w->Infinity for low pass filter the phase difference is equal to -90°, while for the high-pass phase difference is 0°.

This phase difference is clearly visible on doing the complex circuital analysis of the circuits in low pass and pass.

For low pass

$$\mathbf{V_{out}} = \frac{1}{1+jwRC} \times \mathbf{V_{in}}$$

For high pass

$$\mathbf{V_{out}} = \frac{jwRC}{1+jwRC} \times \mathbf{V_{in}},$$

Hence, the phase difference is now clearly visible from the above written formulas for low-pass filter and high-pass filter.

- **What is the difference between the operation of the circuits in Parts 2 and 3?**

The circuit in part-2 (Low-pass filter) is allows only low-frequencies to pass and as Frequency becomes high Gain is reduced to near 0. Exactly opposite process happens in (High-pass filter), it allows only frequencies above a certain range to pass, other low-frequencies are filtered out. Basically, in other words, the capacitor filters out high-frequencies and the resistors filters out low-frequencies.